ELECTRONICS CIRCUITS II AND SIMULATION LAB

LIST OF EXPERIMENTS

CYCLE I

1. SERIES AND SHUNT FEED BACK AMPLIFIERS
2. DESIGN OF WEIN BRIDGE OSCILLATOR
3. DESIGN OF TRANSISTOR RC PHASE SHIFT OSCILLATOR
4. DESIGN OF LC – HARTLEY AND COLPITTS OSCILLATOR
5. CLASS C TUNED AMPLIFIER
6. INTEGRATORS AND DIFFERENTIATORS
7. CLIPPERS AND CLAMPERS
8. DESIGN OF MONOSTABLE MULTIVIBRATOR
9. DESIGN OF ASTABLE MULTIVIBRATOR
10. DESIGN OF BISTABLE MULTIVIBRATOR

CYCLE II - SIMULATION USING PSPICE

1. DIFFERENTIATE AMPLIFIER
2. ACTIVE FILTER : BUTTERWORTH II ORDER LPF
3. ASTABLE,MONOSTABLE AND BISTABLE MULTIVIBRATOR – TRANSISTOR BIAS
4. D / A and A/D CONVERTER (SUCCESSIVE APPROXIMATION)
5. ANALOG MULTIPLIER
6. CMOS INVERTOR , NAND AND NOR

1. FEED BACK AMPLIFIER

AIM:

To design and test the current series and voltage shunt Feedback Amplifier and to calculate the following parameters with and without feedback.

1. **Mid band gain.**
2. **Bandwidth and cutoff frequencies.**
3. **input and output impedance.**

APPARATUS REQUIRED:

S.NO	ITEM	RANGE	Q.TY
1	TRANSISTOR	BC 107	1
2	RESISTOR		1
3	CAPACITOR		
4	CRO	(0-30)MHz	1
5	RPS	(0-30) V	1
6	FUNCTION GENERATOR	(0 – 1)MHZ	1

CURRENT SERIES FEEDBACK

DESIGN: (Without Feedback):

Given data : Vcc = 15V , β = 0.9, f_L = 1kHz, Ic=1mA.
Stability factor = [2-10], Rs = 680Ω ,
Av = 50dB , I_E = 1.2mA .

Gain formula is given by

Av = -hfe R_{Leff} / Z i

Assume, V_{CE} = Vcc / 2

R_{Leff} = Rc || RL

re = 26mV / I_E

hie = β re where re is internal resistance of the transistor.

hie = hfe re

VE = Vcc / 10

On applying KVL to output loop,

$Vcc = I_cR_c + V_{CE} + I_ER_E$

$V_E = I_ER_E$

$Rc = ?$

Since I_B is very small when compared with IC

Ic approximately equal to I_E

$R_E = V_E / I_E = ?$

$V_B = V_{BE} + V_E$

$V_B = V_{CC} . R_{B2} / R_{B1} + R_{B2}$

$S = 1+ (R_B / R_E)$

$R_B = ?$

$R_B = R_{B1} || R_{B2}$

Find

Input Impedance , $Zi = (R_B || hie)$

Coupling and bypass capacitors can be thus found out.

Input coupling capacitor is given by , $X_{ci} = Z_i / 10$

$Xci = 1/ 2\pi fC_i$

$Ci = ?$

output coupling capacitor is given by ,

$X_{co}=(Rc || RL) / 10$

$Xc_0 = 1/ 2\pi fC_o$

$C_o = ?$

By-pass capacitor is given by ,$X_{CE} = 1/ 2\pi fC_E$

$C_E = ?$

Design (With feedback) :

Remove the emitter capacitance (C_E)

$\beta = -1 / R_E$

$Gm = - h_{fe}/ [(hie + R_E) || R_B]$

$D = 1 + \beta G_m$

$G_{mf} = G_m / D$

$Z_{if} = Z_i D$

$Z_{of} = Z_o D$

CIRCUIT DIAGRAM: WITHOUT FEEDBACK:

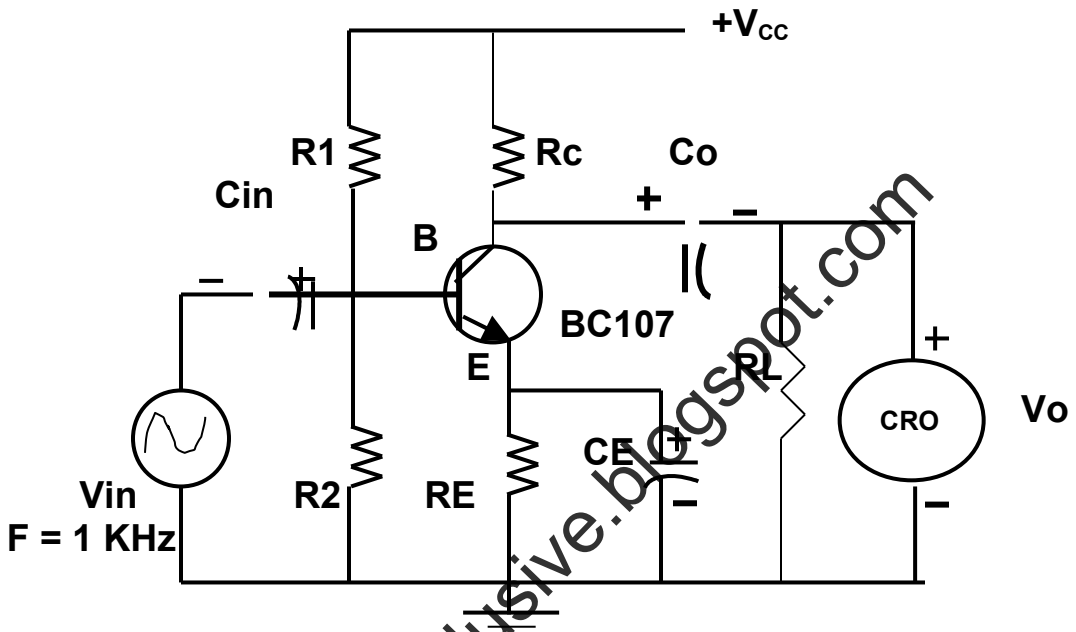

WITH FEEDBACK:

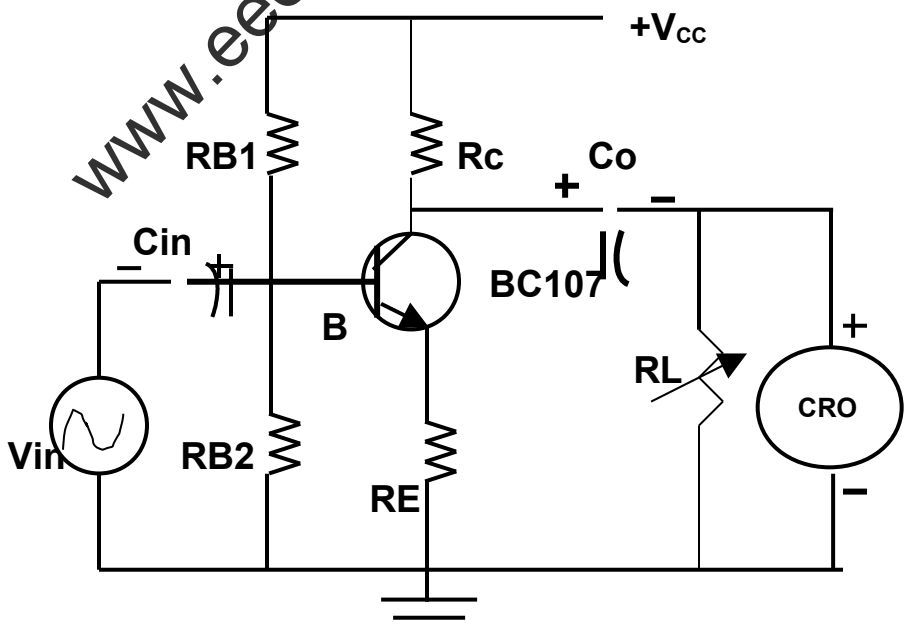

Voltage shunt DESIGN: (Without Feedback):

Given data : Vcc = 15V , f_L = 1kHz, Ic=1mA.

Stability factor = [2-10], Rs = 680Ω ,

Av =40 dB .

Gain formula is given by

Av = -hfe R_{Leff} / Z i

Assume, V_{CE} = Vcc / 2

R_{Leff} = R c | | RL

re = 26mV / I_E

hie = β re where re is internal resistance of the transistor.

hie = hfe re

VE = Vcc / 10

On applying KVL to output loop,

Vcc = I_cR_c + V_{CE} + I_ER_E

V_E = I_ER_E

Rc = ?

Since I_B is very small when compared with Ic

Ic approximately equal to I_E

R_E = V_E / I_E = ?

V_B = V_{BE} + V_E

V_B = V_{CC} . R_{B2} / R_{B1} + R_{B2}

S = 1+ R_B / R_E

R_B =?

R_B = R_{B1}|| R_{B2}

Find

Input Impedance, Zi = (R_B || hie)

Coupling and bypass capacitors can be thus found out.

Input coupling capacitor is given by , $X_{ci} = Z_i / 10$

$Xci = 1/ 2\pi f C_i$

$Ci = ?$

output coupling capacitor is given by ,

$X_{co} = (Rc || RL) / 10$

$Xc_0 = 1/ 2\pi f C_o$

$C_o = ?$

By-pass capacitor is given by, $X_{CE} = 1/ 2\pi f C_E$

$C_E = ?$

Design (With feedback) :

Connect the feedback resistance (Rf) and feedback capacitor (Cf) as shown in the figure.

$Xcf = R_f / 10$

$C_f = R_f / 2\pi f \times 10$

Assume, $Rf = 68\ K\Omega$

$\beta = -1 / R_f$

Trans – resistance $Rm = - h_{fe} (RB || Rf) (Rc || Rf) / (RB || Rf) + hie$

$D = 1 + \beta Rm$

$Avf = Rmf / Rs$ $\quad$ $Rmf = Rm / D$

$Z_{if} = Zi / D$

$Z_{of} = Z_o / D$

CIRCUIT DIAGRAM: Voltage shunt feedback

WITHOUT FEEDBACK:

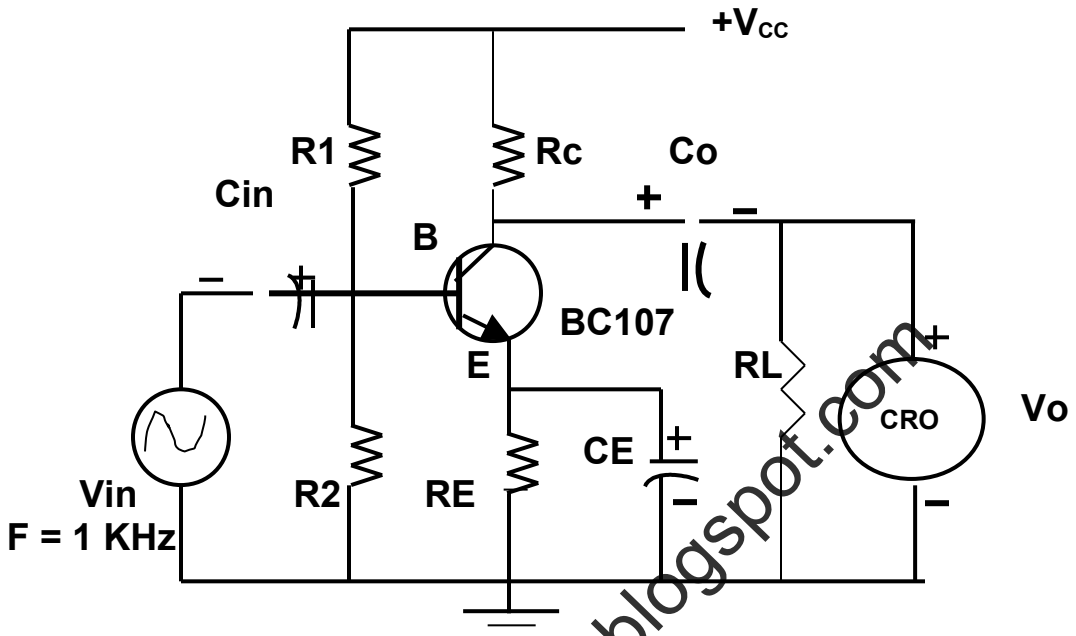

WITH FEEDBACK:

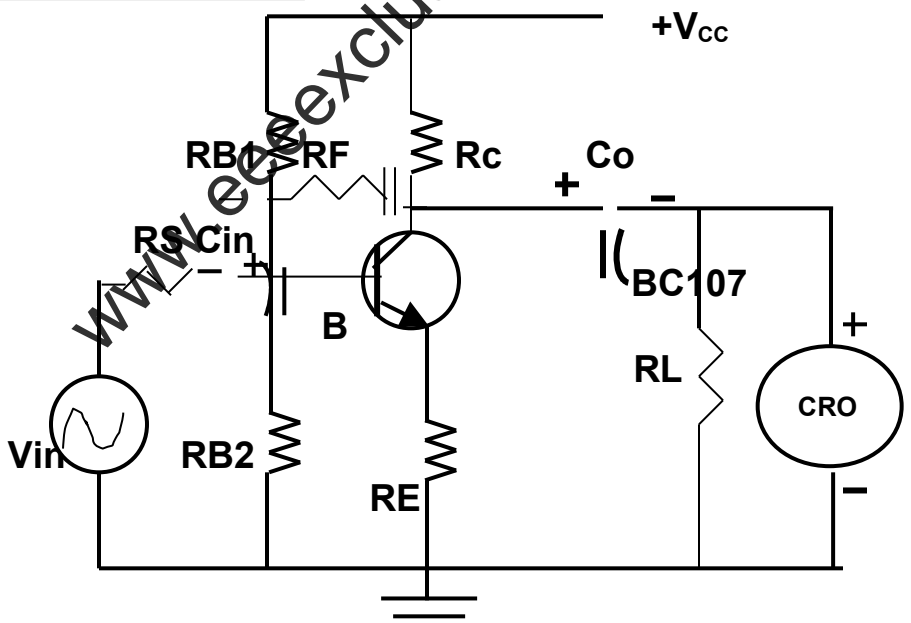

MODEL GRAPH(WITH & WITHOUT FEEDBACK)

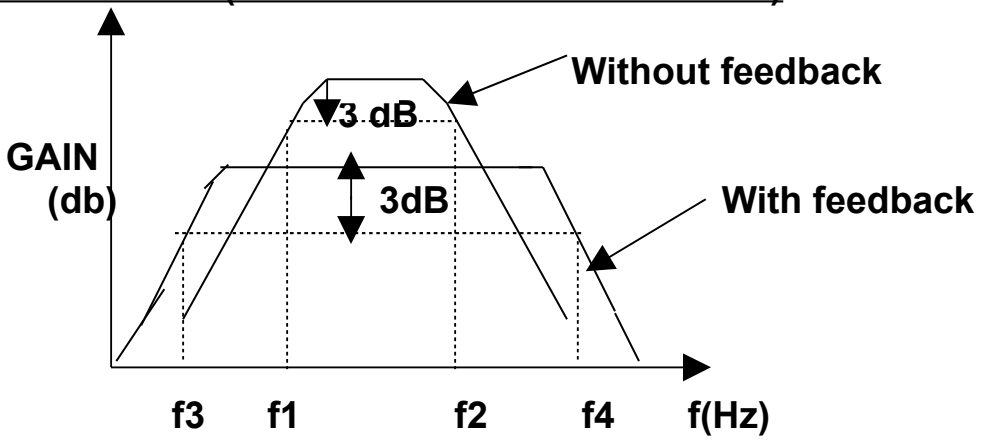

f2 – f1 = Bandwidth of without feedback circuit
f4 – f3 = Bandwidth of with feedback circuit

THEORY:

An amplifier whose function fraction of output is fed back to the input is called feed back amplifier. Depending upon whether the input is in phase or out of phase with the feed back signal, they are classified in to positive feed back and negative feed back. If the feed back signal is in phase with the input, then the wave will have positive gain. Then the amplifier is said to have a positive feed back.

If the feed back signal is out of phase with the input ,then the wave will have a negative gain. The amplifier is said to have a negative feed back. The values of voltage gain and bandwidth without feed back.

PROCEDURE:

The connections are made as shown in the circuit. The amplifier is checked for its correct operation .Set the input voltage to a fixed value. Keeping the input voltage Vary the input frequency from 0Hz to 1MHz and note down the corresponding output voltage. plot the graph : gain (dB) vs frequency .Find the input and output impedances. Calculate the bandwidth from the graph. Remove RE and follow the same procedure.

OBSERVATION:

WITH OUT FEEDBACK

Vin = ---------- Volts

S.NO	FREQUNCY	O/P voltage Vo	Gain Av=20 log Vo/Vi

WITH FEEDBACK

S.NO	FREQUNCY	O/P voltage	Av=20 log Vo/Vi

RESULT:

	Theoritical		Practical	
	With F/B	Without F/B	With F/B	Without F/B
Input Impedance				
Output impedance				
Bandwidth				
Transconductance (gm)				

2. WEIN BRIDGE OSCILLATOR

Aim : To Design and construct a Wein – Bridge Oscillator for a given cut-off frequency .

APPARATUS REQUIRED:

S.NO	ITEM	RANGE	Q.TY
1	TRANSISTOR	BC107	2
2	RESISTOR		
3	CAPACITOR		
4	CRO	-	1
5	RPS	DUAL(0-30) V	1

<u>CIRCUIT DIAGRAM:</u>

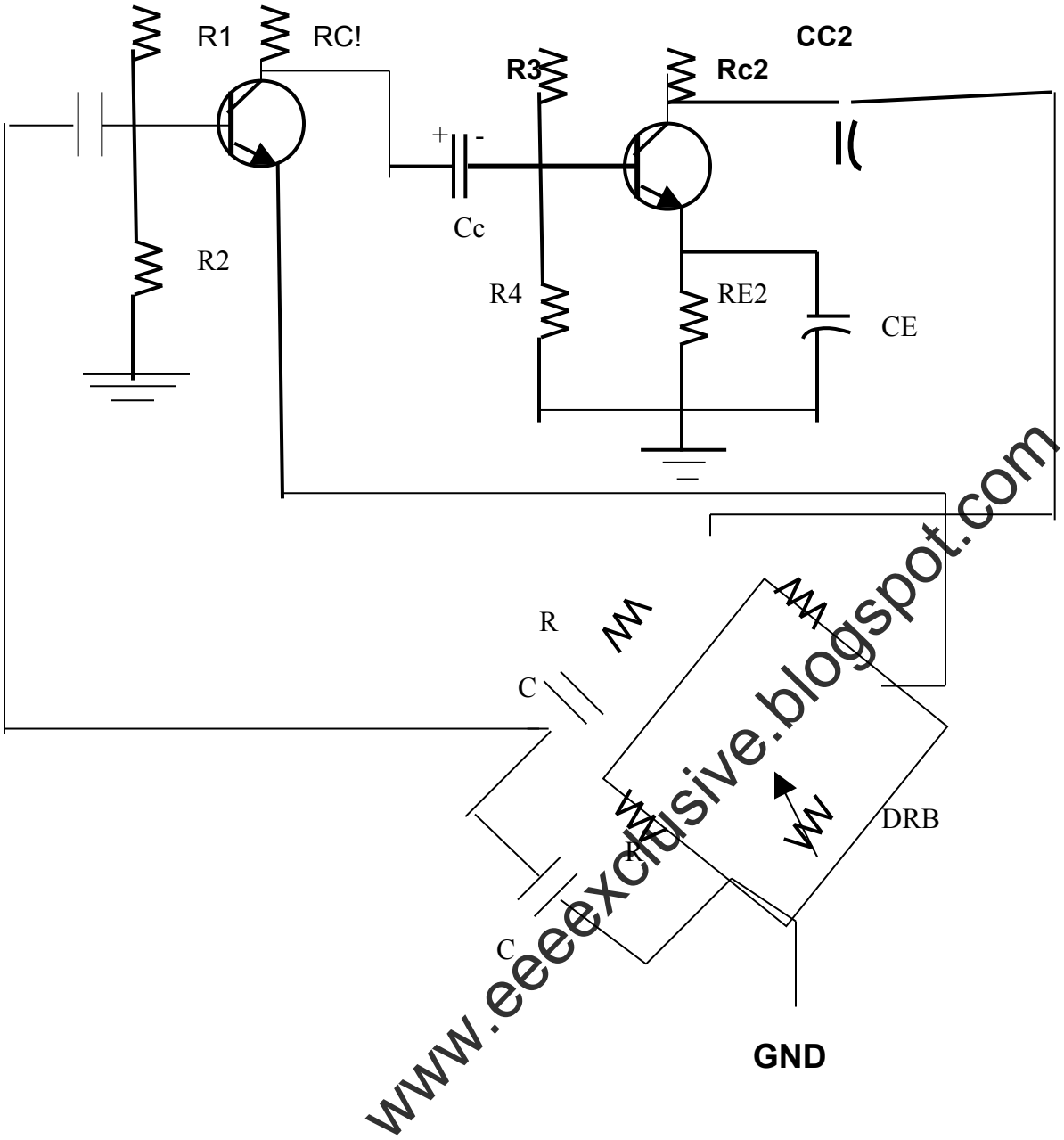

MODEL GRAPH:

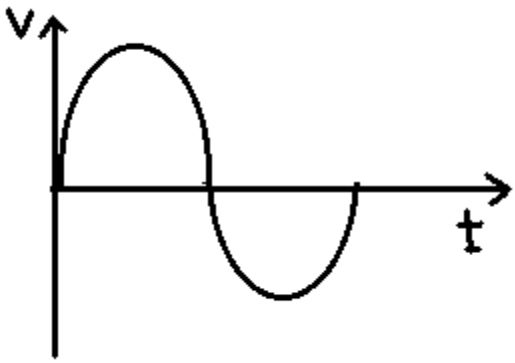

Design

Given : Vcc = 12V , fo = 2 KHz, $I_{c1} = I_{c2}$ = 1mA.; Stability factor = [0-10],

fL = 100Hz

When the bridge is balanced,

$$fo = 1/ 2\pi RC$$

Assume, C = 0.1μF

Find, fo = ?

Given data : Vcc = 15V , f_L = 50Hz, $I_{c1} = I_{c2}$ = 1mA.; A_{vT} = 3 ;

Av1 =2; Av2 = 1;

Stability factor = [10]

Gain formula is given by

$Av = -hfe\ R_{Leff} / Zi$

$R_{Leff} = R\ c_2 \mid\mid RL$

hfe_2 = 200 (from multimeter)

$re_2 = 26mV / I_{E2} = 26$

$hie_2 = hfe_2\ re_2 = 200 \times 26 = 5.2kW$

From dc bias analysis , on applying KVL to the outer loop, we get

$Vcc = I_{c2}R_{c2} + V_{CE2} + V_{E2}$

$V_{cE2} = Vcc/2$; $V_{E2} = Vcc / 10$; I_{c2} = 1mA

Rc_2 = ?

Since I_B is very small when compared with Ic

Ic approximately equal to I_E

$Av_2 = -hfe_2\ R_{Leff} / Zi_2$

Find RL|| Rc2 from above equation

Since Rc2 is known , Calculate RL.

$$V_{E2} = I_{E2}R_{E2}$$

Calculate R_{E2}

$$S = 1+ R_{B2} / R_{E2}$$

R_{B2} =?

R_{B2} =R3 || R4

$V_{B2} = V_{CC}$. R4 / R3 + R4

$V_{B2} = V_{BE2} + V_{E2}$

R3 =?

Find R4

Zi2 = (R_{B2} || hie2)

Zi2 = ?

R_{leff1} = Zi2|| Rc1

Find R_{leff1} from the gain formula given above

Av1 = -hfe1 R_{Leff1}/ Zi1

R_{Leff1} = ?

On applying KVL to the first stage, we get

Vcc = Ic_1 Rc_1 + V_{CE1} +V_{E1}

V_{CE1} = VCC / 2 ; V_{E1} = VCC / 10

Rc1 = ?

Find Ic1 approximately equal to I_{E1}

R6 = RE1 = ?

S = 1+ R_{B1} / R_{E1}

R_{B1} =?

R_{B1} =R1 || R2

$V_{B1} = V_{CC}$. R2 / R1 + R2

VB1 = VBE2 +VE2

Find R1 = ?

Therefore find R2 = ?

Zi1 = (R_{B1} || hie1)

R5 = RL – R6

Coupling and bypass capacitors can be thus found out.

Input coupling capacitor is given by , $X_{ci} = Z_i / 10$

$Xci = 1/ 2\pi f C_i$

Ci = ?

output coupling capacitor is given by ,

$X_{co}=(Rc_2 || RL_2) / 10$

$Xc_0 = 1/ 2\pi f C_o$

C_o =?

By-pass capacitor is given by, $X_{CE} = R_{E2} / 10$

X_{CE} $1/ 2\pi f C_{E2}$

C_E =?

<u>THEORY:</u>

In wein bridge oscillator, wein bridge circuit is connected between the amplifier input terminals and output terminals. The bridge has a series rc network in one arm and parallel network in the adjoining arm. In the remaining 2 arms of the bridge resistors R1and Rf are connected. To maintain oscillations total phase shift around the circuit must be zero and loop gain unity. First condition occurs only when the bridge is balanced . Assuming that the resistors and capacitors are equal in value, the resonant frequency of balanced bridge is given by

Fo = 0.159 RC

<u>PROCEDURE:</u>

1. The circuit is constructed as per the given circuit diagram.
2. Switch on the power supply and observe the output on the CRO(sine wave)
3. Note down the practical frequency and compare it with the theoretical frequency.

RESULT :

	Theoritical	Practical
Frequency	$f = 1 / 2 \Pi RC$	

3. TRANSISTOR PHASE SHIFT OSCILLATOR

AIM:

To design and construct the transistor Phase shift oscillator.

APPARATUS REQUIRED:

S.NO	ITEM	RANGE	Q.TY
1	TRANSISTOR	BC 107	1
2	RESISTOR		
3	CAPACITOR		
4	CRO	(0 – 30) MHz	1
5	RPS	(0-30) V	1
6	FUNCTION GENERATOR	(0-1)MHz	1

CIRCUIT DIAGRAM:

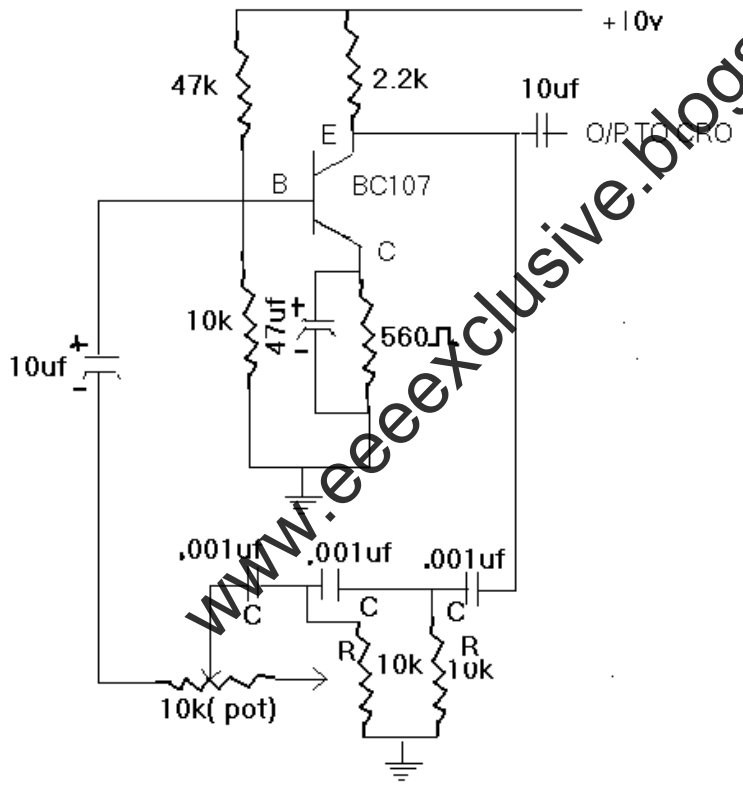

MODEL GRAPH:

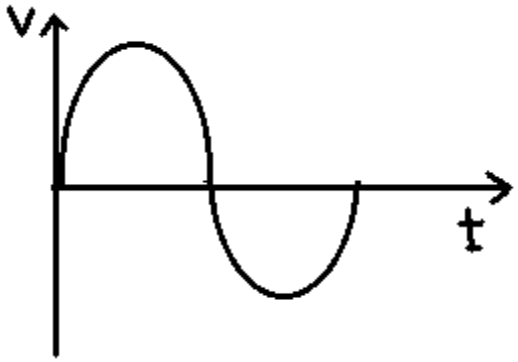

DESIGN:

Given : Vcc = 12V , fo = 1 KHz,C = 0.01μF; I_E = 5mA.;

Stability factor = 10

f = 1/ 2πRC Find R

R1 = (Ri – R)

R >> Rc

Beta = -1 / 29

Amplifier Design :

Gain formula is given by

Av = -hfe R_{Leff} / hie (Av = 29, design given)

Assume, V_{CE} = Vcc / 2

R_{Leff} = R c | | RL

re = 26mV / I_E

hie = β re where re is internal resistance of the transistor.

hie = hfe re

VE = Vcc / 10

On applying KVL to output loop,

Vcc = I_cR_c + V_{CE} + I_ER_E

V_E = I_ER_E

Rc = ?

Since I_B is very small when compared with Ic

Ic approximately equal to I_E

R_E = V_E / I_E = ?

V_B = V_{BE} + V_E

V_B = V_{CC} . R_{B2} / R_{B1} + R_{B2}

S = 1+ R_B / R_E

R_B =?

R_B = R_{B1}|| R_{B2}

Find RB1 & RB2

Input Impedance, Zi = (R_B || hie)

Coupling and bypass capacitors can be thus found out.

Input coupling capacitor is given by , $X_{ci} = Z_i / 10$

$Xci = 1/ 2\pi f C_i$

Ci = ?

output coupling capacitor is given by ,

$Xc_0 = 1/ 2\pi f C_o$

C_o =?

By-pass capacitor is given by, $X_{CE} = 1/ 2\pi f C_E$

C_E =?

<u>THEORY:</u>

The Transistor Phase Shift Oscillator produces a sine wave of desired designed frequency. The RC combination will give a 60° phase shift totally three combination will give a 180° phase shift. . The BC107 is in the common emitter configuration. Therefore that will give a 180° phase shift totally a 360° phase shift output is produced. The capacitor value is designed in order to get the desired output frequency. Initially the C and R are connected as a feedback with respect to input and output and this will maintain constant sine wave output. CRO is connected at the output.

<u>PROCEDURE:</u>

1. **The circuit is constructed as per the given circuit diagram.**
2. **Switch on the power supply and observe the output on the CRO(sine wave)**
3. **Note down the practical frequency and compare it with the theoretical frequency.**

RESULT :

	Theoritical	Practical
Frequency	$f = 1 / 2 \Pi RC \sqrt{6}RC$	

4. LC OSCILLATOR – HARTLEY and COLPITT OSCILLATOR

AIM :

To Design and construct the given Oscillator at the given operating frequency.

APPARATUS REQUIRED:

S.NO	ITEM	RANGE	Q.TY
1	TRANSISTOR	BC 107	1
2	RESISTOR		1
3	CAPACITOR		
4	CRO	(0 – 30)MHZ	1
5	RPS	(0-30) V	1
6	FUNCTION GENERATOR	(0- 1) MHz	1
7	DIB, DRB		1

CIRCUIT DIAGRAM :

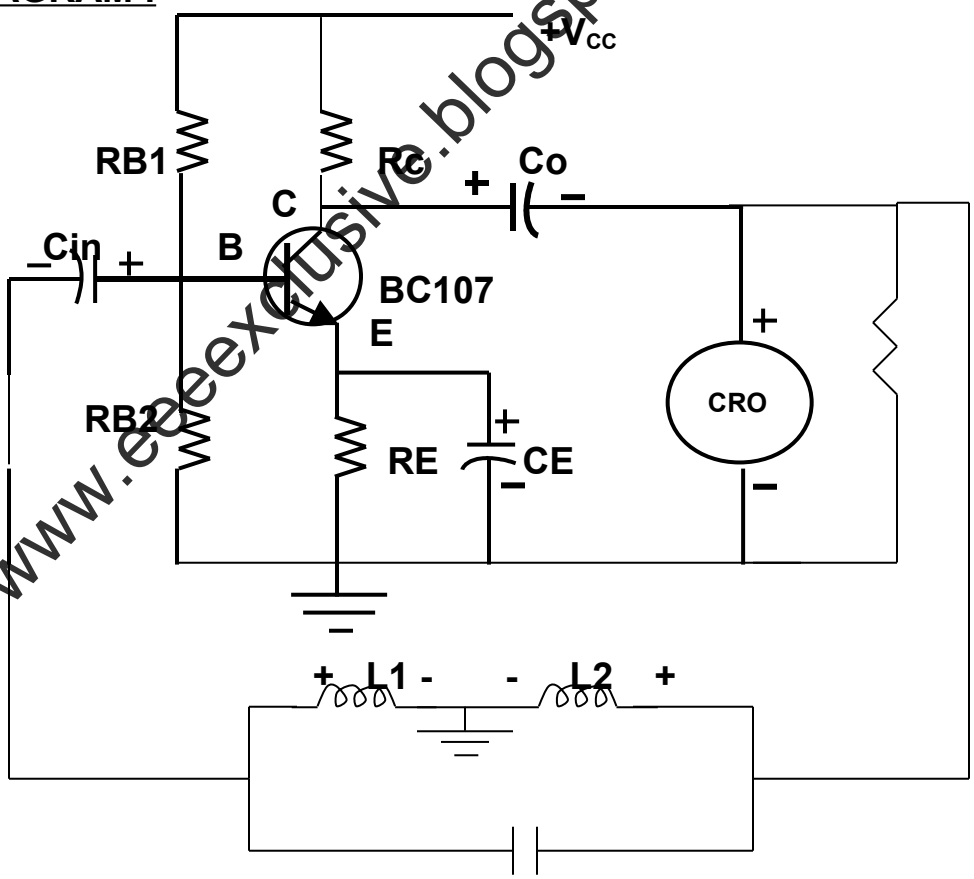

CIRCUIT DIAGRAM:

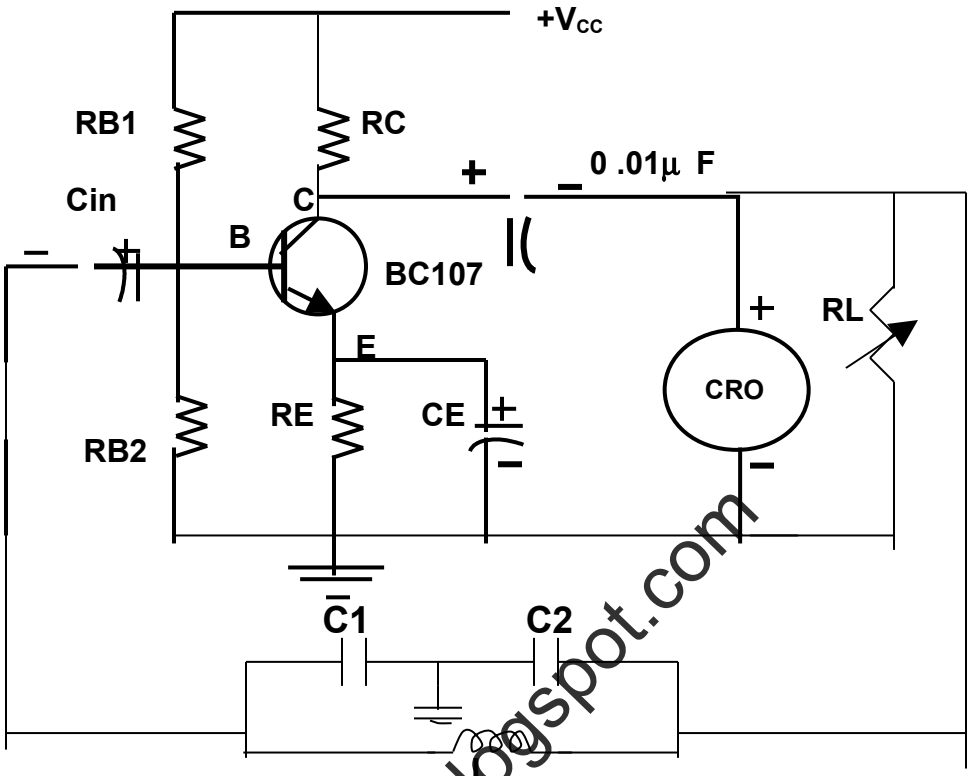

MODEL GRAPH:

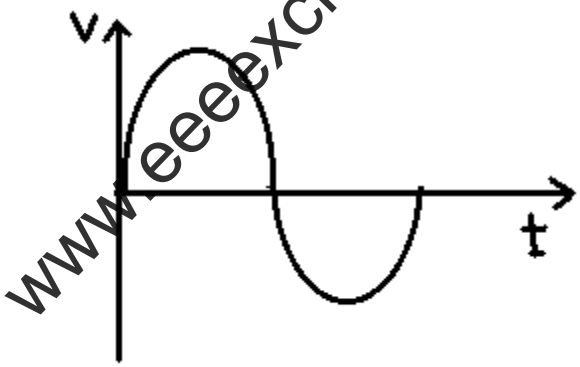

Design of Feedback Network (Hartely Oscillator) :

Given : L1 = 1mH ; f = 800kHz; Vcc = 12V ; Av =50 ; fL = 1Khz

$Av = 1 / \beta = -L1 / L2$

$F = 1/2\pi\sqrt{(L1 + L2)C}$; C = ?

Design of Feedback Network (Colpitt Oscillator) :

Given : C1 = 0.1μF;f =800kHz; Vcc = 12V ; Av = 50 ; S = 10

I_E = 5mA; fi = 1kHz

Av = Av = 1 / β = C2 / C1

f = 1/2π√(C1 + C2) / LC1C2

L = ?

Amplifier Design :

Gain formula is given by

Av = -hfe R_{Leff} / hie (Av = 29, design given)

Assume, V_{CE} = Vcc / 2

R_{Leff} = R c | | RL

re = 26mV / I_E

hie = β re where re is internal resistance of the transistor.

hie = hfe re

VE = Vcc / 10

On applying KVL to output loop,

Vcc = I_cR_c + V_{CE} + I_ER_E

V_E = I_ER_E

Rc = ?; RL = ?

Since I_B is very small when compared with Ic

Ic approximately equal to I_E

R_E = V_E / I_E = ?

V_B = V_{BE} + V_E

V_B = V_{CC} . R_{B2} / R_{B1} + R_{B2}

S = 1+ R_B / R_E

R_B =?

R_B = R_{B1}|| R_{B2}

Find RB1 & RB2

Input Impedance, Zi = (R_B || hie)

Coupling and bypass capacitors can be thus found out.

Input coupling capacitor is given by , $X_{ci} = Z_i / 10$

$$Xci = 1/ 2\pi\ f\ C_i$$

Ci = ?

output coupling capacitor is given by ,

$$Xc_0 = (Rc \parallel RL) / 10$$

$$Xc_0 = 1/ 2\pi\ f\ C_o$$

$$C_o = ?$$

By-pass capacitor is given by, $X_{CE} = R_E / 10$

$$X_{CE} = 1/ 2\pi\ f\ C_E$$

$$C_E = ?$$

THEORY:

LC oscillator consisting of a tank circuit for generating sine wave of required frequency. Rectifying Barkhausen criteria Aβ for a circuit containing reactance Aβ must be positive and greater than or equal to unity.

PROCEDURE :

1. **The circuit connection is made as per the circuit diagram.**
2. **Switch on the power supply and observe the output on the CRO(sine wave).**
3. **Note down the practical frequency and compare it with the theoretical frequency.**

THEORETICAL FREQUENCY FOR HARTLEY OSCILLATOR:

$$fc = 1/ 2\pi\sqrt{(L1+L2).C}$$

THEORETICAL FREQUENCY FOR COLPITT OSCILLATOR:

$$fc = 1/2\pi\sqrt{(C1 + C2) / LC1C2}$$

PRACTICAL :

Observed Values:

Time Period =

Frequency =

RESULT :

Thus the LC oscillator is designed for the given frequency and the output response is verified.

	Theoritical		Practical	
Frequency	Hartley	Colpitt	Hartley	Colpitt

5. CLASS C SINGLE TUNED AMPLIFIER

AIM:

To study the operation of class c tuned amplifier.

APPARATUS REQUIRED:

S.NO	ITEM	RANGE	Q.TY
1	TRANSISTOR	BC 107	1
2	RESISTOR	4.2KΩ , 500Ω , 197KΩ , 2.2KΩ ,	1
3	CAPACITOR	0.1μ f 0.001μ f, 100μ f	2 1
4	CRO	-	1
5	RPS	(0-30) V	1
6	FUNCTION GENERATOR	-	1

CIRCUIT DIAGRAM:

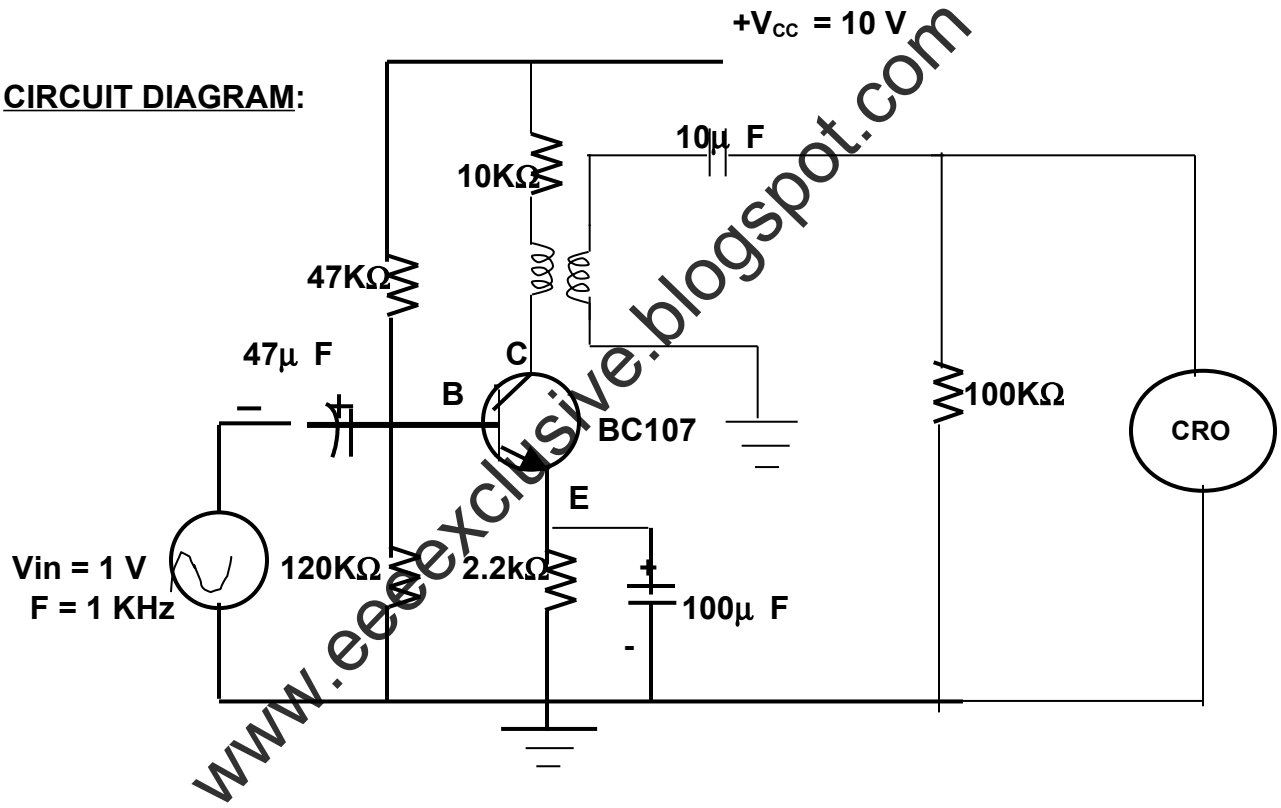

MODEL GRAPH:

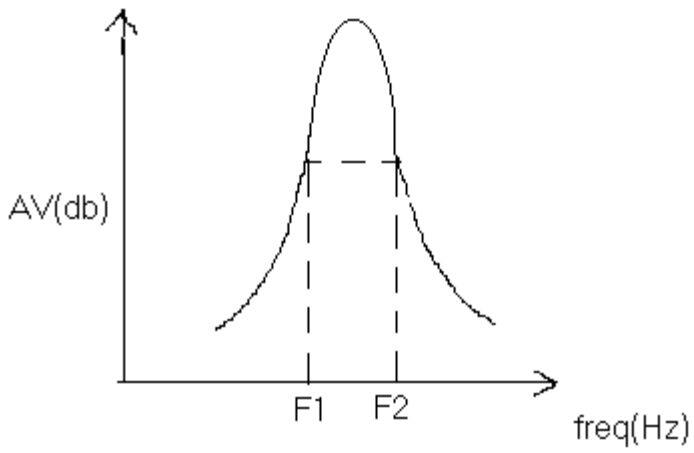

THEORY:

The amplifier is said to be class c amplifier if the Q Point and the input signal are selected such that the output signal is obtained for less than a half cycle, for a full input cycle Due to such a selection of the Q point, transistor remains active for less than a half cycle .Hence only that much Part is reproduced at the output for remaining cycle of the input cycle the transistor remains cut off and no signal is produced at the output .the total Angle during which current flows is less than 180°.This angle is called the conduction angle, Qc

PROCEDURE:

1.The connections are given as per the circuit diagram.
2. Connect the CRO in the output and trace the waveform.
3.calculate the practical frequency and compare with the theoretical Frequency
4.plot the waveform obtained and calculate the bandwidth

RESULT:

Thus a class c single tuned amplifier was designed and its bandwidth is Calculated.

6. INTEGRATOR USING OP-AMP

AIM:

To study the output waveform of integrator using op-amp.

APPARATUS REQUIRED:

APPARATUS NAME	RANGE	QUANTITY
AUDIO OSCILLATOR		1
CRO		1
RESISTORS	1K,10K	1
CAPACITOR	0.1μ F	1
OP-AMP	IC741	1
BREADBOARD		
RPS		

THEORY:

A simple low pas RC circuit can also work as an integrator when time constant is very large. This requires very large values of R and C.The components R and C cannot be made infinitely large because of practical limitations. However in the op-amp integrator by MILLER's theorem, the effective input capacitance becomes C_f $(1-A_v)$, where A_v is the gain of the op-amp. The gain A_v is the infinite for an ideal op-amp, so the effective time constant of the opamp integrator becomes very large which results perfect integration.

PROCEDURE:

1. **Connections are given as per the circuit diagram.**
2. **The resistance R_{comp} is also connected to the (+) input terminal to minimize the effect of the input bias circuit.**
3. **It is noted that the gain of the integrator decreases with increasing frequency.**
4. **Thus the integrator circuit does not have any high frequency problem.**

CIRCUIT DIAGRAM:

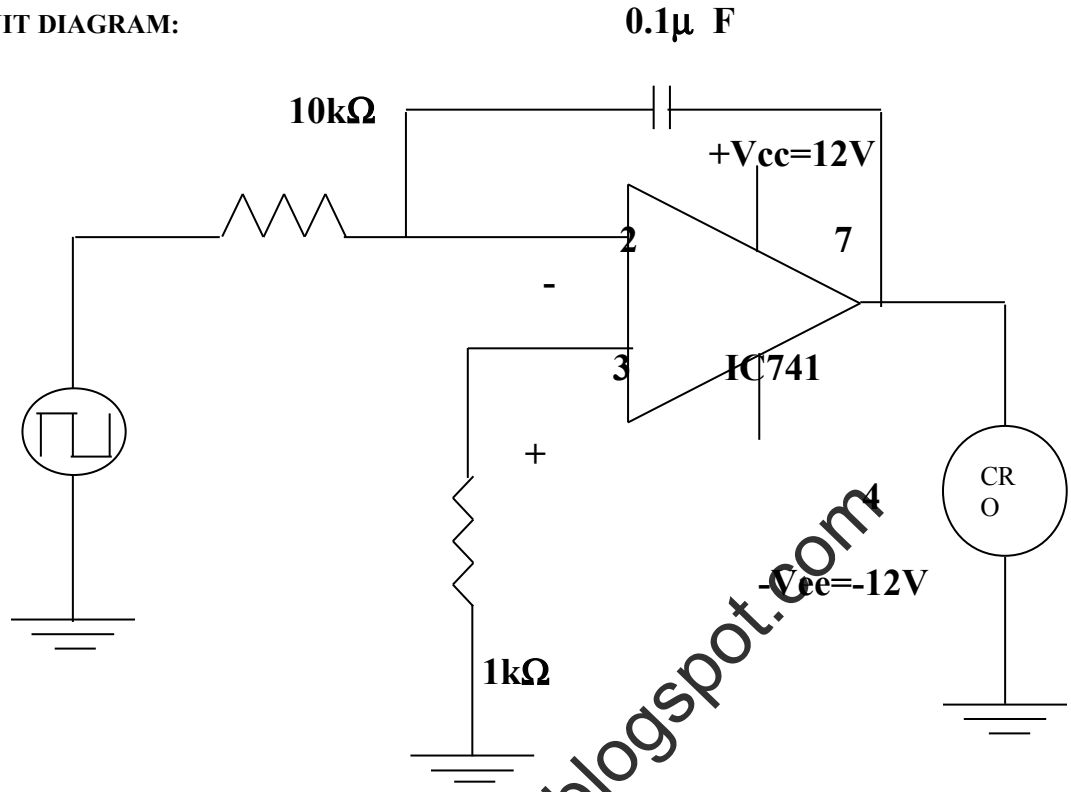

MODEL GRAPH:

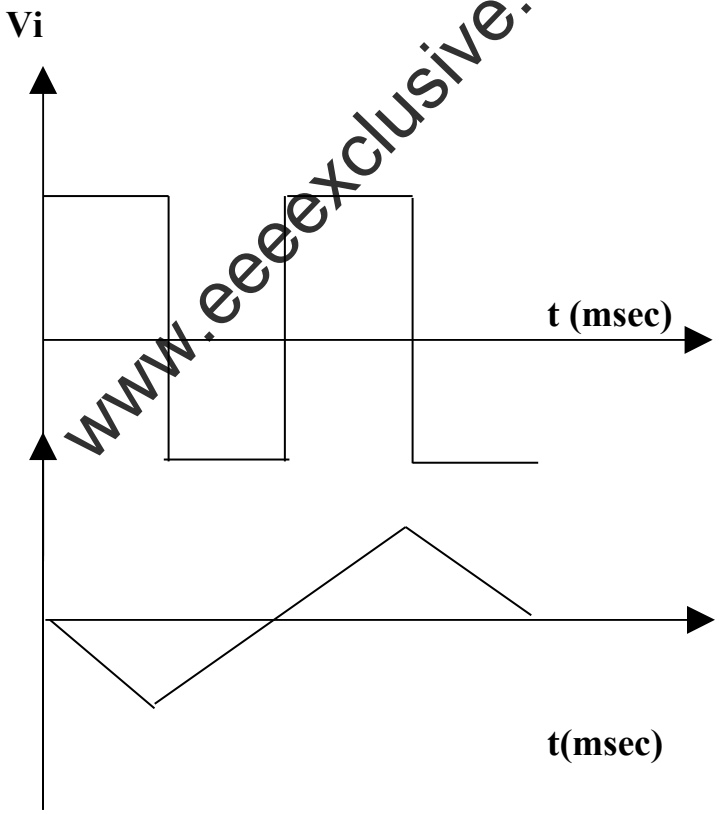

RESULT:- Thus the integrator using op-amp is studied.

7.CLIPPER & CLAMPER CIRCUITS

AIM : **To observe the clipping waveform in different clipping configurations.**

APPARATUS REQUIRED :

S.NO	ITEM	RANGE	Q.TY
1	DIODE	IN4001	1
2	RESISTOR	1KΩ 10 KΩ	1 1
3	CAPACITOR	0.1μF	1
4	FUNCTION GENERATOR	(0-1) MHz	1
5	CRO	-	1

CLIPPER CIRCUIT DIAGRAM :

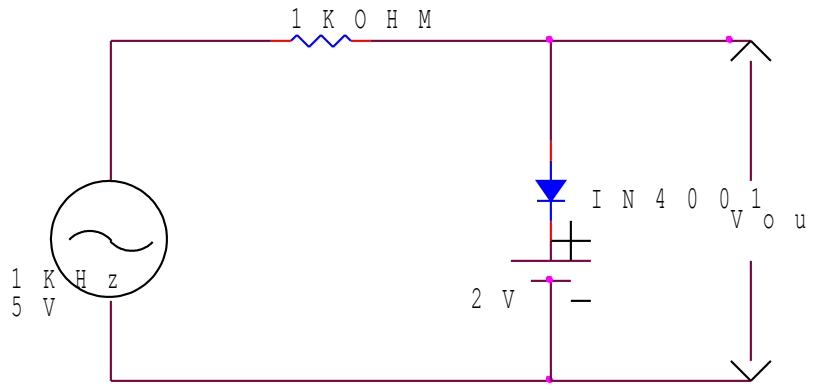

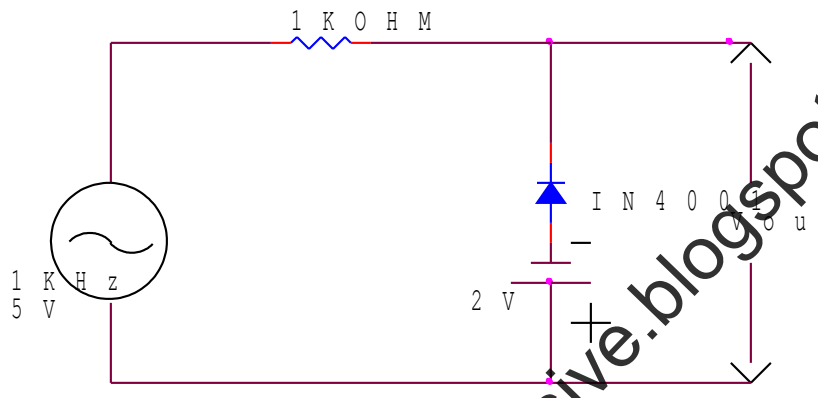

Procedure :

1. Connections are given as per the circuit .
2. Set input signal voltage (5v,1kHz) using function generator.
3. Observe the output waveform using CRO.
4. Sketch the observed waveform on the graph sheet.

CLAMPING CIRCUITS

Aim:

To study the clamping circuits

(a). Positive clamper circuit (b) Negative clamper circuit

APPARATUS REQUIRED :

S.NO	ITEM	RANGE	Q.TY
1	DIODE	IN4001	1
2	RESISTOR	1KΩ 10 KΩ	1 1
3	CAPACITOR	0.1μF	1
4	FUNCTION GENERATOR	(0-1) MHz	1
5	CRO	-	1

DESIGN :

Given $f = 1kHz$

$T = 1 / f = 1x\ 10^{-3}$ Sec RC

Assuming, $C = 0.1\mu F$

$R = 10\ K\Omega$

Circuit Diagram : Positive clamper

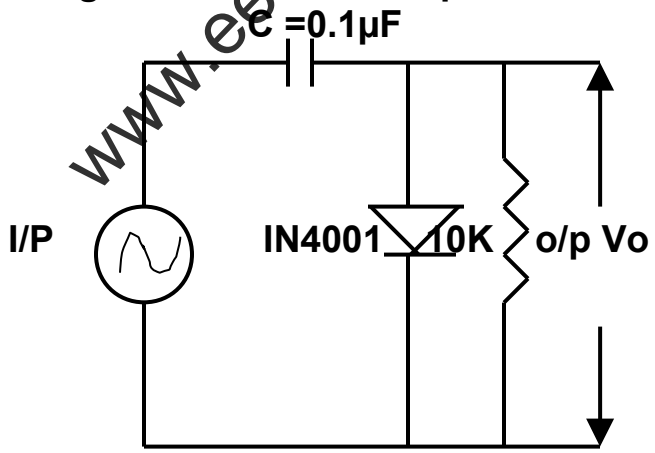

Negative clamper

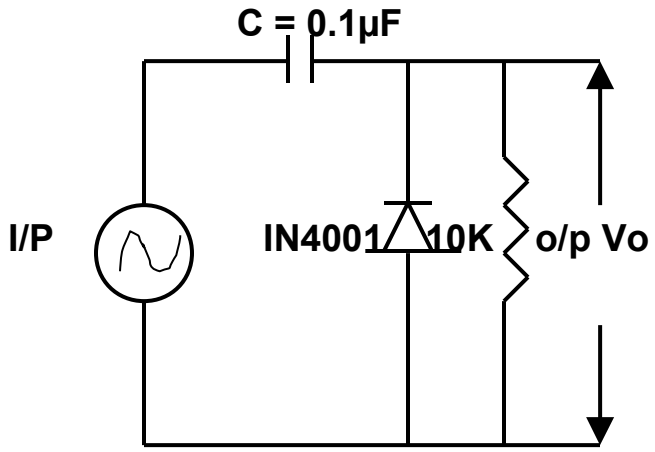

Procedure :

1. Connections are given as per the circuit .
2. Set input signal voltage (5v,1kHZ) using function generator.
3. Observe the output waveform using CRO.
4. Sketch the observed waveform on the graph sheet.

Result :

Thus the waveforms are observed and traced .for clipper and clamper circuits .

8. MONOSTABLE MULTI VIBRATOR

AIM:

To Design the monostable multivibrator and plot the waveform.

APPARATUS REQUIRED:

S.NO	ITEM	RANGE	Q.TY
1	IC	NE555	1
2	RESISTOR	9KΩ	1
3	CAPACITOR	0.01μ F 0.1μ F	1 1
4	RPS	(0-30) V	1
5	CRO	-	1

THEORY:

A monostable multivibrator has one stable state and a quasistable state. When it is triggered by an external agency it switches from the stable state to quasistable state and returns back to stable state. The time during which it states in quasistable state is determined from the time constant RC. When it is triggered by a continuous pulse it generates a square wave. Monostable multi vibrator can be realized by a pair of regeneratively coupled active devices, resistance devices and op-amps.

DESIGN :

Given Vcc = 12V ; V_{BB} = - 2 V; Ic = 2 mA; $V_{CE(sat)}$ = 0.2 V ; h_{FE} = 200 ;

f = 1kHz.

$R_C = V_{CC} - V_{CE(sat)} / I_C = 12 - 0.2 / 2x\ 10^{-3} = 5.9\ K\Omega$

$I_{B2}(min) = I_{c2} / h_{fe} = 2mA / 200 = 10\ \mu A$

Select $I_{B2} > I_{B1}(min)$ (say 25 μ A)

Then $R = V_{CC} - V_{BE(sat)} / I_{B2} = 12 - 0.7 / 25 \times 10^{-6} = 452\ K\Omega$

T = 0.69 RC

$1x10^{-3} = 0.69 \times 452 \times 10^{3}\ C$

C = 3.2 nF

$V_{B1} = V_{BB}\ R1 / R1 + R2 + V_{CE(sat)}\ R2 / R1+R2$

Since Q1 is off state, VB1 less than equal to 0.

Then $V_{BB}\ R1 / R1 + R2 = V_{CE(sat)}\ R2 / R1+R2$

$V_{BB}\ R1 = V_{CE(sat)}\ R2$

2R1 = 0.2R2

Assume R1 = 10 KΩ . Then R2 = 100 KΩ

C1 = 25pF (Commutative capacitor)

procedure :

1. Connect the circuit as per circuit diagram.
2. Switch on the regulated power supply and observe the output waveform at
   the collector of Q1 and Q2 and plot it.
3. Trigger the monostable multivibrator with a pulse and observe the change in waveform.

4. Plot the waveform and observe the changes before and after triggering the input to the circuit.

CIRCUIT DIAGRAM :

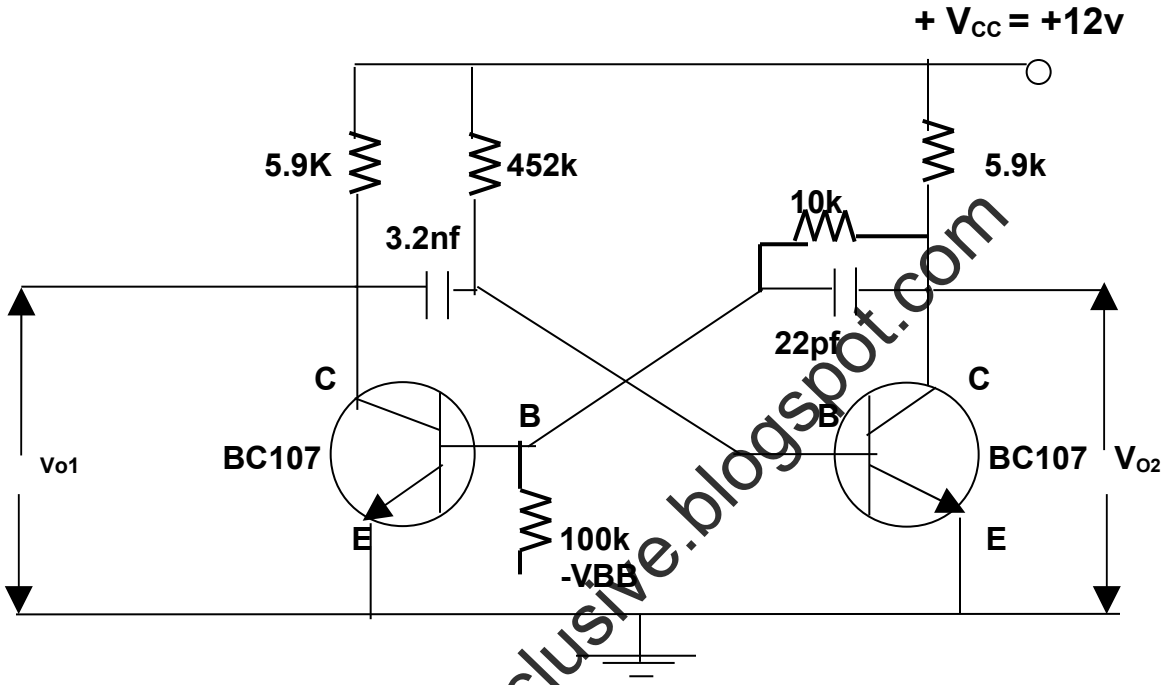

PROCEDURE:

The connections are made as per the diagram. The value of R is chosen as 9kΩ . The DCB is set to the designed value. The power supply is switched on and set to +5V.

The output of the pulse generator is set to the desired frequency. Here the frequency of triggering should be greater than width of ON period (i.e.) T >W. The output is observed using CRO and the result is compared with the theoretical value. The experiment can be repeated for different values of C and the results are tabulated.

OBSERVATION

C (uf)	Theoritical(T=1.095 RC(ms)))	Practical T(ms)

RESULT: Thus the monostable multivibrator using IC555 is designed and its output waveform is traced.

9.ASTABLE MULTIVIBRATOR

AIM :

To design a astable multivibrator and study the waveform.

APPARATUS REQUIRED :

S.NO	ITEM	RANGE	Q.TY
1	TRANSISTOR	BC107	2
2	RESISTOR	980KΩ 4.9KΩ	2 2
3	CAPACITOR	0.74nF	2
4	RPS	(0-30) V	1
5	CRO	-	1

THEORY :

Astable multivibrator has no stable state, but has two quasi – stable states. The circuit oscillates between the states (Q1 ON , Q2 OFF) and (Q2 ON , Q! OFF). The output at the collector of each transistor is a square wave. Therefore this circuit is applied as a square wave generator. Refer to the fig each transistor has a bias resistance RB and each base is capacitor coupled to the collector of other transistor. When Q1 is ON and Q2 is OFF, C1 is charged to ($V_{cc} – V_{BE1}$) positive on the right side. For Q2 ON and Q! OFF, C2 is charged to ($V_{cc} – V_{BE2}$) positive on the left side.

CIRCUIT DIAGRAM :

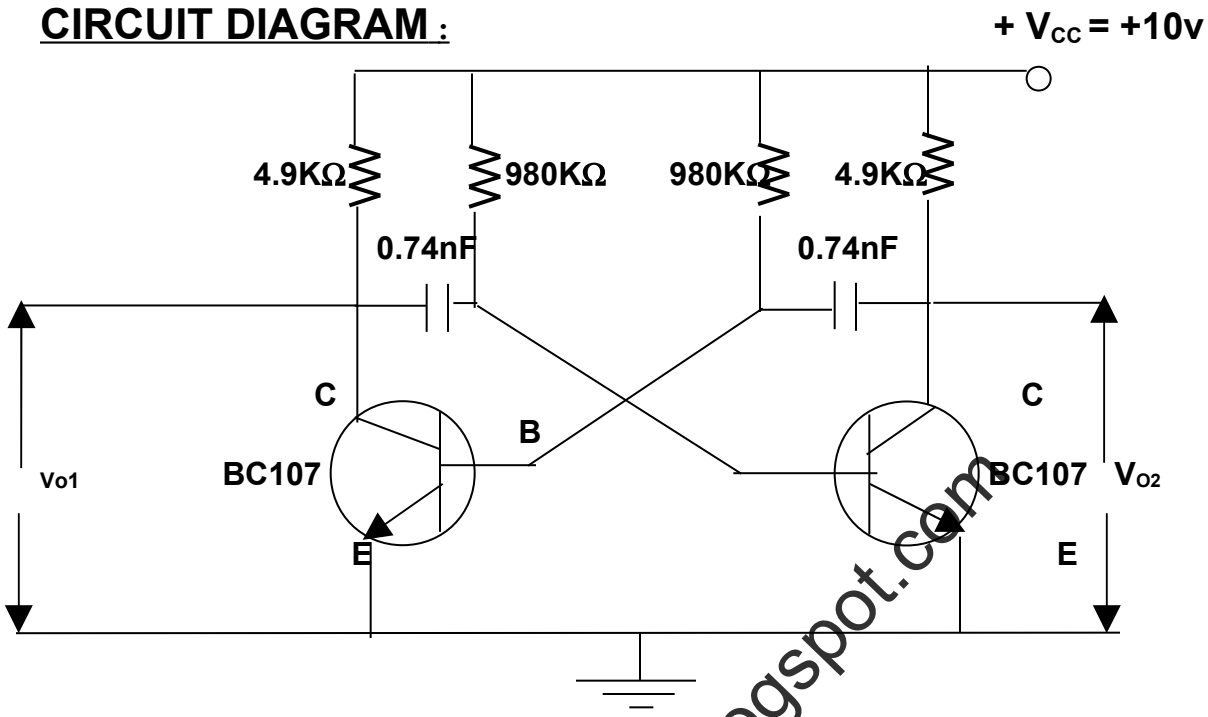

Design

Given Vcc = 10V ; Ic = 2 mA; h_{FE} = 200 ; f = 1 kHz

$R \leq h_{FE} R_c$

$R_C = V_{CC} - V_{C2(sat)} / I_C = 10 - 0.2 / 2 \times 10^{-3} = 4.9\ K\Omega$

$R \leq 200 \times 4.9 \times 10^3 = 980\ K\Omega$

T = 1.38 RC

$1 \times 10^{-3} = 1.38 \times 980 \times 10^3 \times C$

C =0.74 nF

Waveforms :

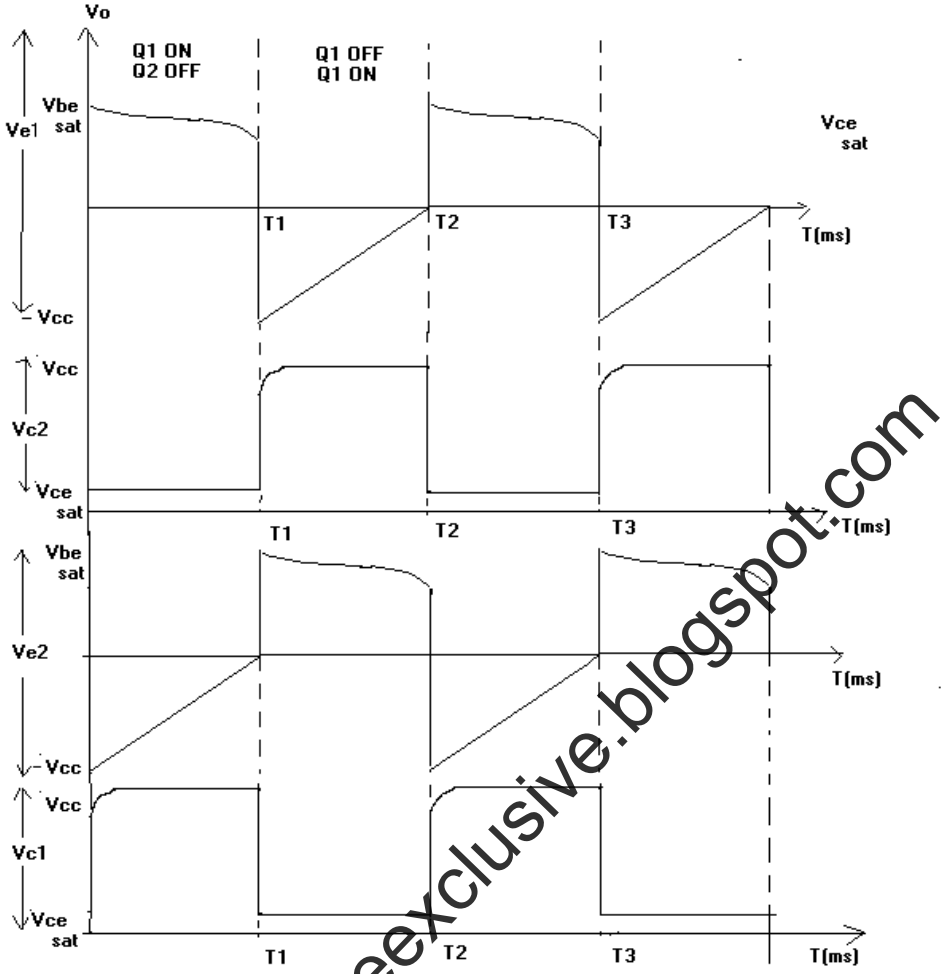

PROCEDURE :

1. The connections are given as per the circuit diagram.
2. Switch on the power supply.
3. Observe the waveform both at bases andcollectors of Q1 and Q2.
4. Connect the CRO in the output of Q1 and Q2 and trace the square waveform.

RESULT :

Thus the square wave forms are generated using astable multivibrator.

10.BISTABLE MUITIVIBRATOR

AIM:

To design a bistable multivibrator and study the output waveform.

Apparatus Required:

S.NO	ITEM	RANGE	Q.TY
1	TRANSISTOR	BC 107	1
2	RESISTOR	4.7KΩ 22KΩ	2 2
3	CAPACITOR	0.022μ f 10μ f 100Pf	2 2 2
4	CRO	-	1
5	RPS	(0-30) V	1
6	FUNCTION GENERATOR	-	1

THEORY:

The bistable multivibrator is a switching circuit with a two stable state either Q1 is on and Q2 is off (or)Q2 is on and Q1 is off. The circuit is completely symmetrical. load resistors RC_1 and RC_2 all equal and potential

Divider (R1,R2)and (R_1' and' R_2') from identical bias Network at the transistor bases. Each transistor is biased from the collector of the other

Device when either transistor is ON and the other transistor is biased OFF.C1andC2 operate as speed up capacitors or memory capacitors.

Design :

Given Vcc = 12V ; V_{BB} = -12v; Ic = 2mA; $V_{C(sat)}$ = 0.2 V

VBE(sat) = 0.7V

Assume Q1 is cut-off Vc1 = VCC(+12V)

Q2 is in saturation (ON) Vc2 = Vc(sat) (0.2 V)

Using superposition principle,

VB1 = VBB[R1 / R1 + R2] + Vc2[R2 / R1+R2] << 0 .7

Let us consider VB1 = -1V

Then -1 = [-12R1/R1+R2] + [0.2R2 / R1+R2]

Assume R1 = 10KΩ such that it ensures a loop gain in excess of unity during the transition between states. The inequality

R1 < hfe Rc

R2 = 91.67 KΩ

Test for conditions : Q1 = cut-off (Vc1 = 12V)

Q2 = Saturation (ON) (VC2 = 0.2V)

Minimum base current, IB (min) must be less than the base current (IB) i.e.,

I_B (min) < I_B

Calculate h_{fe} from multimeter (say = 200)

$I_{B\,2}$(min) = I_{c2} / h_{fe}

I_{c2} = Ic – I3

I_{c2} = (2 – 0.12)mA = 1.88 mA

$I_{B\,2}$(min) = 1.88mA / 200 = 9.4 μ A

$I_{B\,2}$ = I_1 – I_2

$I_{B\,2}$ = (0.71 – 0.14)mA = 0.57 mA

Since $I_{B\,2}$ > $I_{B\,2}$(min) ,Q2 is ON

C1 = 25 pF (Commutative capacitor)

$I_C = V_{CC} - Vc_2 / R_C$

$R_C = V_{CC} - Vc_2 / I_C = 12 - 0.2 / 2x\ 10^{-3} = 5.9\ K\Omega$

$I_3 = Vc_2 - V_{BB} / R1 + R2 = 0.2 + 12 / (10 + 91.6)K = 0.12mA$

$I_1 = Vc_1 - V_{BE} / R_C + R1 = 12 - 0.7 / (5.9 + 10)\ K = 0.71mA$

$I_2 = V_{BE} - V_{BB} / R_2 = 0.7 + 12 / 91.6K = 0.14\ mA$

Procedure :

1. **Connect the cir cuit as per circuit diagram.**
2. **Switch on the regulated power supply and observe the output waveform at the collector of Q1 and Q2.**
3. **Sketch the waveform.**
4. **Apply a threshold voltage and observe the change of states of Q1 and Q2.**
5. **Sketch the waveform.**

CIRCUIT DIAGRAM :

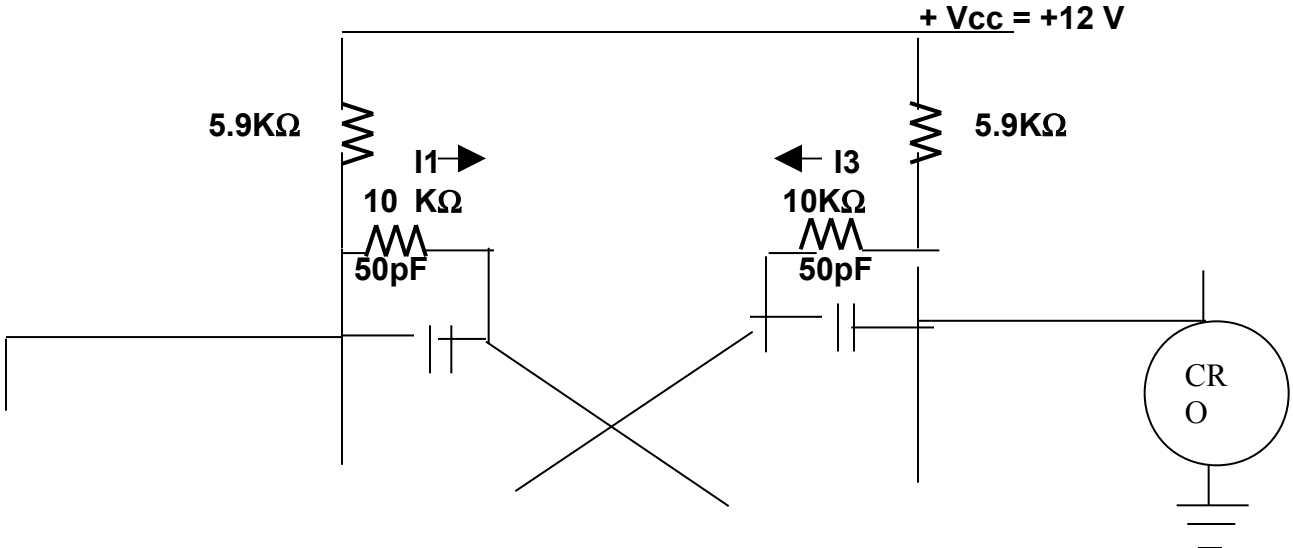

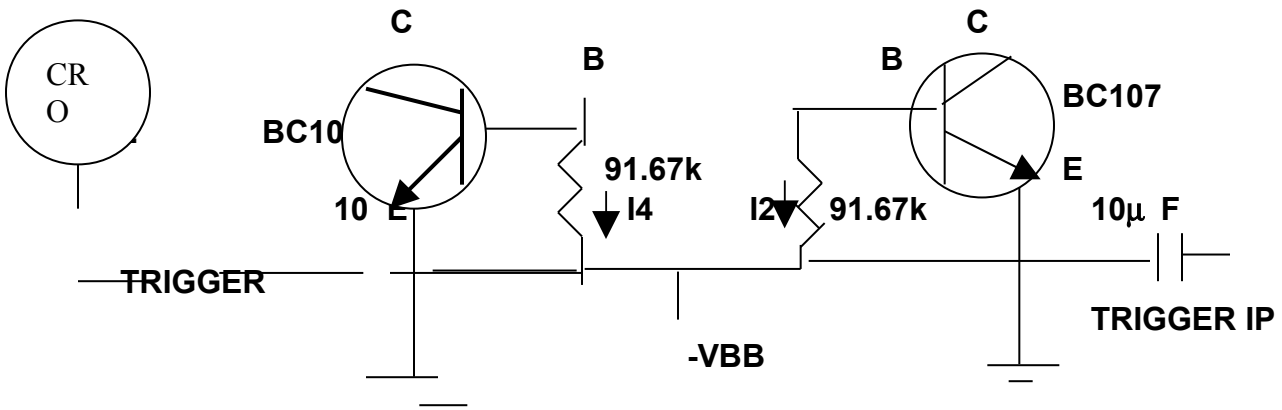

OBSERVATION :

VOLTAGE	Time Period	Frequency	Amplitude
VC1 Vc2			

RESULT:

Thus the bistable multivibrator is designed and the square waveforms are generated at the output.

CYCLE II
SIMULATION LAB

1. Differential Amplifier

Aim : Calculate the dc voltage gain , the input resistanceand the output resistance of a differential amplifier with a transistor current source.

Specifications: The input voltage is 0.1v. The model parameters of the bipolar transistors are BF = 50,RB = 70, RC = 40.

Circuit Diagram :

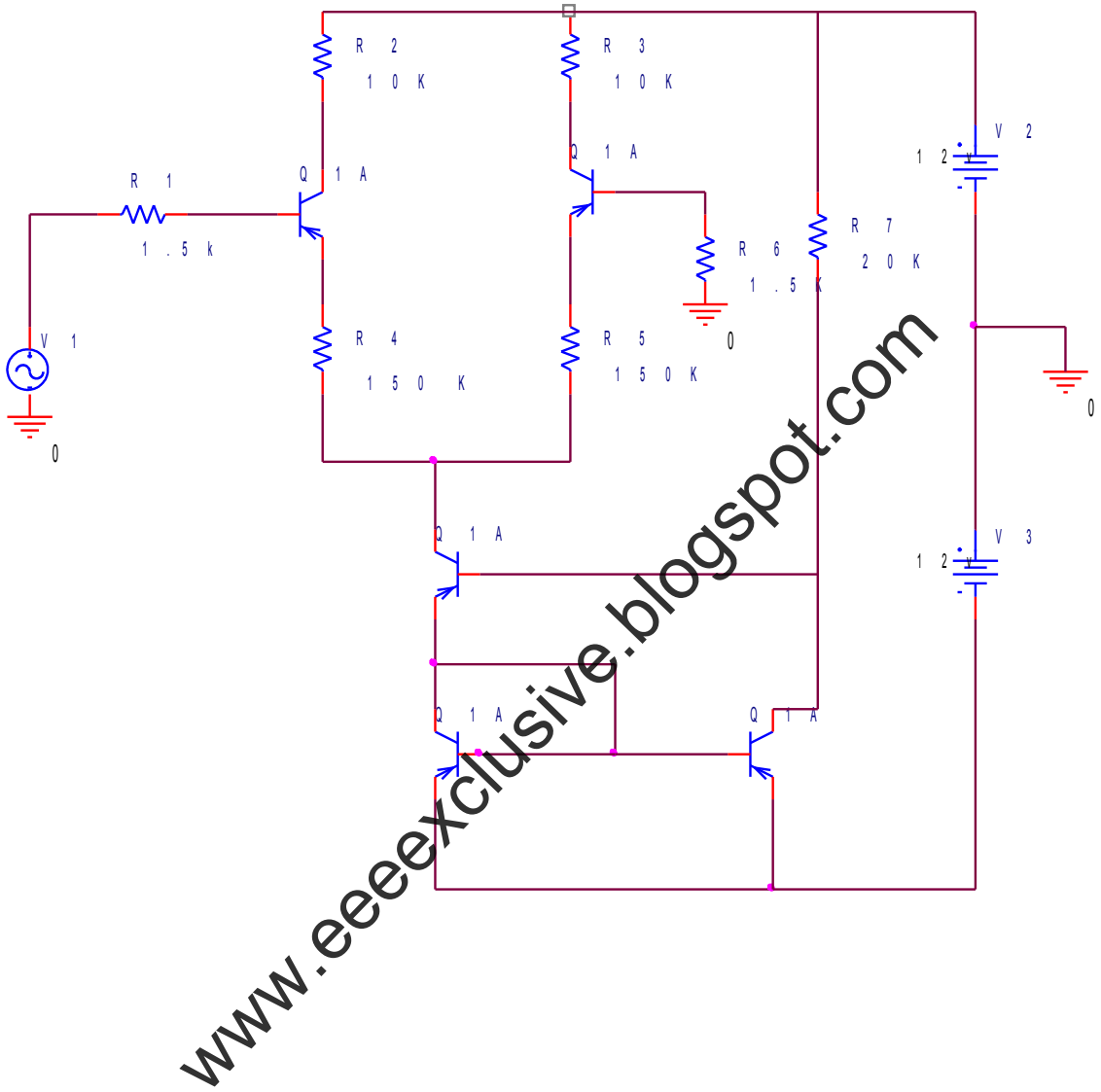

Program :

Vcc	**11**	**0**	**12v**	
VEE	**0**	**10**	**12v**	
VIN	**1**	**0**	**DC**	**0.25v**
RC1	**11**	**3**	**10k**	
RC2	**11**	**5**	**10k**	
RE1	**4**	**12**	**150**	
RE2	**7**	**12**	**150**	

```
RS1     1                       2       1.5k
RS2     6                       0       1.5k
Rx      11                      8       20k

Q1      3                       2       4       QN
Q2      5                       6       7       QN
Q3      12                      8       9       QN
Q4      9                       9       10      QN
Q5      8                       9       10      QN

. TF V (3,5) VIN
END
```

The results of the transfer – function analysis by the .TF commands are given below

ACTIVE LOW BUTTER FILTER

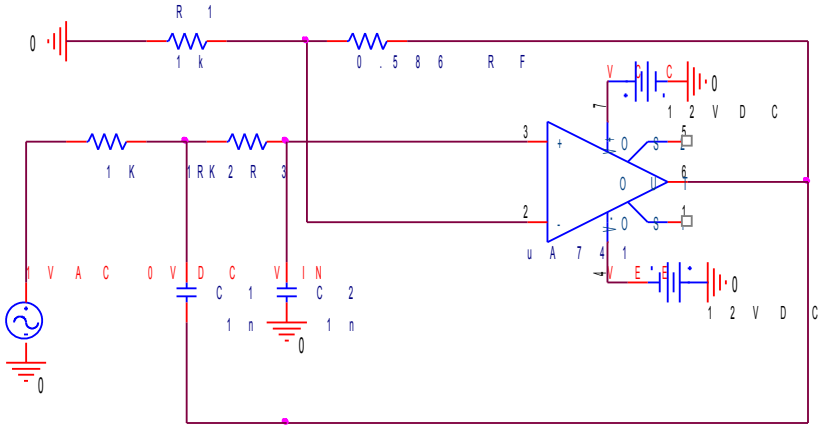

PROGRAM:

```
LOW PASS FILTER
VCC 6  0  DC  12V
VEE 0  7  DC  12V
 VIN 1  0  AC  1V
R1  4  0  1K
R2  1  2   1K
R3   2   3  1K
RF  4   5   0.586K
C2  2   5  0.079 UF
C3  3   0   0.079UF
X1  4   3  6  7  5  UA 741
.LIB NOB .LIB
.AC DEC 10HZ  100HZ  1MEGHZ
.PROBE
.END
```


PROGRAM FOR FREE RUNNING MULTIVIBRATOR

```
VCC   6   0   DC    12V
VEE  0   7  DC  12V
R1  1   0   100K
R2   2   3     100K
R3   2  3  10K
C1   3   0    0.1 UF IC = -5V
XA1  1     3    6      7   2    UA741
.LIB   EVAL  .LIB
.TRANS 10US  4MS   UIC
.PROBE
.END
```

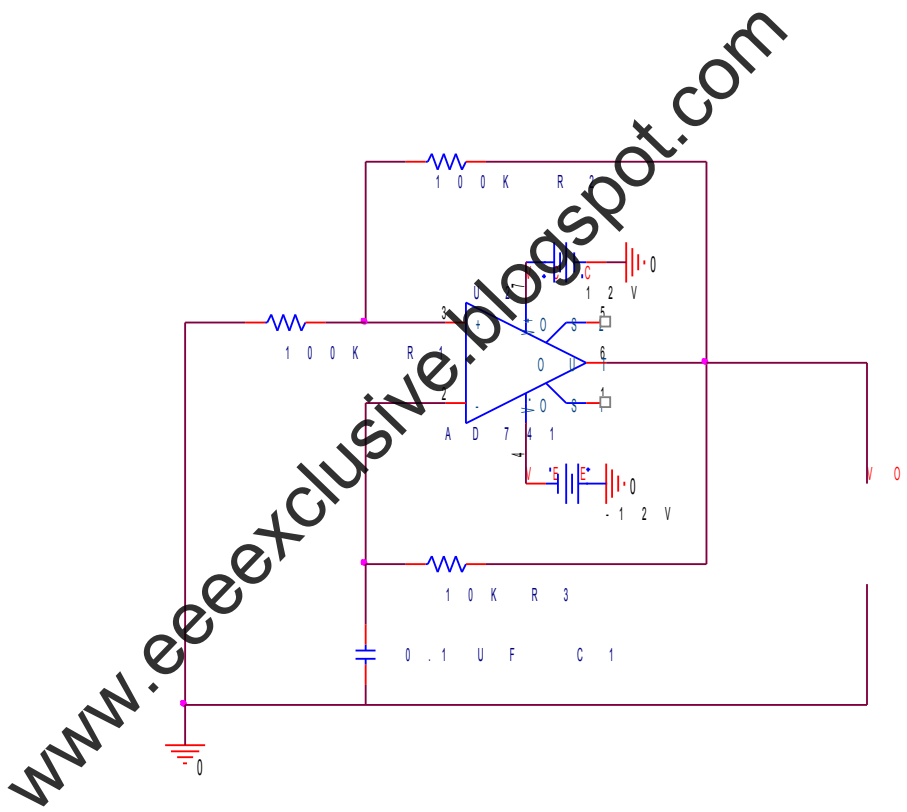

A CMOS INVERTER

```
VDD 2 0 5V
VIN  1 0 DC 5V PULSE (0   5V     0     1NS   1NS     20US    40US)
RL    3   0   100k
M1     3   1    2  2   PMOD    L=1U   W= 20U
M2     3   1    0  0   NMOD    L=1U   W= 5U
.TRAN    1US     80US
.TF   V(3)    VIN
.OP
.PLOT TRAN V(3)   V(1)
.PROBE
.END
```

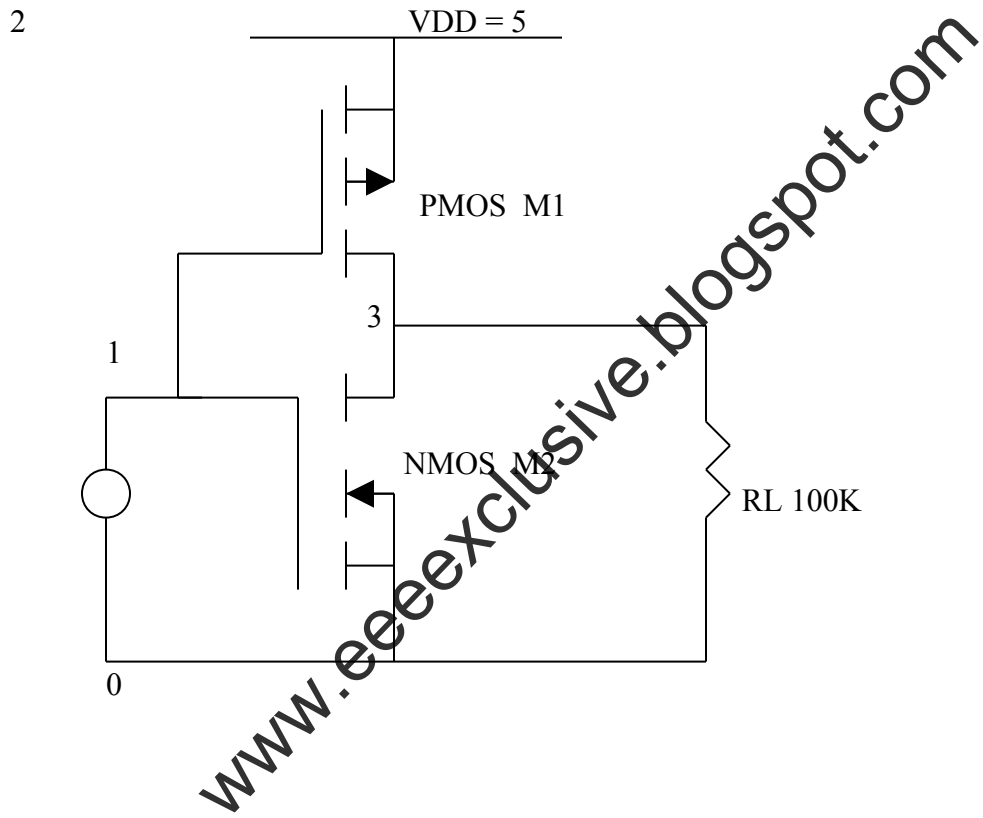

ANALOG MULTIPLIER

```
V1  1 0 1V
V2  4 0  1V
```

```
R1  1  2  1K
R2  4  5  1K
R3   3   7  1K
R4  6  7 1K
R5  7  8  1K
        R6  10  0  1K
        D1   2  3  DA
        D2  5  6  DA
        D3  8  9  DA
        .MODEL DA D
        X1 2 0 3 IOP
        X2  5 0 6 IOP
         X3 7 0 8 IOP
         X4 9 0 10 IOP
        .SUBCKT  IOP  M  P   V0
        RI M   P  1G
        E   V0   0   P   M   2E5
        .ENDS
        .DC V1  -1  1  0.1
        .PROBE
        .END
```